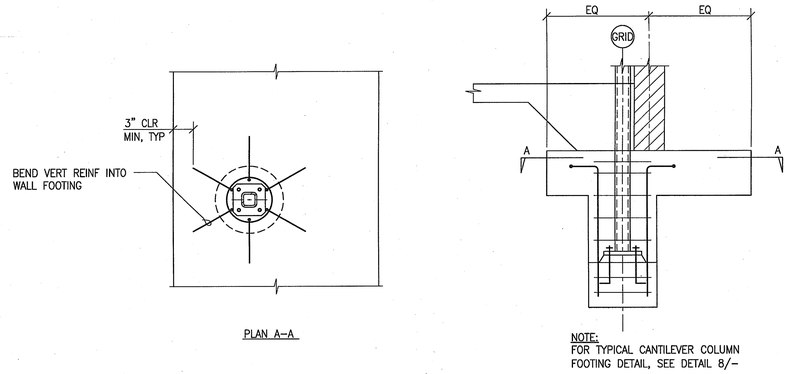

CANTILEVER COLUMN FOOTING ADJACENT TO CMU WALL (4)

3/4"=1'-0"

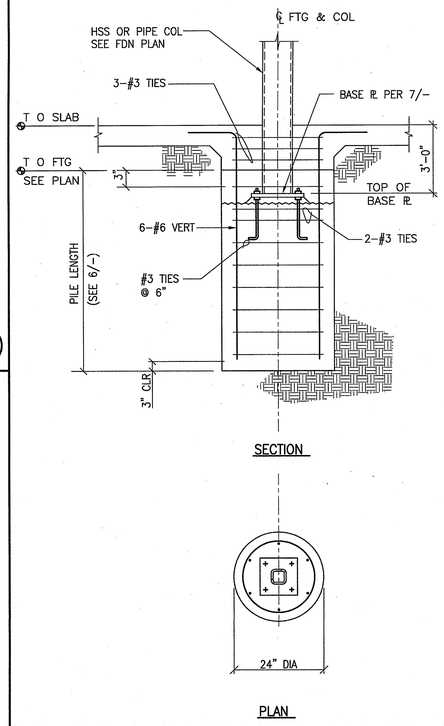

CANTILEVER COLUMN FOOTING (8)

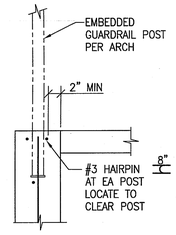

TOP OF CONC RET WALL AT GUARDRAIL POST (2)

FOOTING SCHEDULE				
TYPE	FOOTING SIZE	FOOTING THICKNESS	REINFORCING	REMARKS
A	3'-0" SQ.	18"	3 - #5 EA WAY @ BOTTOM	-
B	4'-0" SQ.	18"	4 - #5 EA WAY @ BOTTOM	-
C	5'-0" SQ.	18"	5 - #5 EA WAY @ BOTTOM	-
D	6'-0" SQ.	18"	6 - #6 EA WAY @ BOTTOM	-
E	7'-0" SQ.	24"	7 - #6 EA WAY @ BOTTOM	-
F	9'-0" SQ.	24"	9 - #6 EA WAY @ BOTTOM	-
G	10'-0" SQ.	24"	11 - #6 EA WAY @ BOTTOM	-
H	1'-6"ø	LENGTH 4'-0"	-	SEE DETAIL 8/-
J	1'-6"ø	LENGTH 5'-0"	-	SEE DETAIL 8/-
K	1'-6" SQ	18"	3 - #4 EA WAY @ BOTTOM	-
L	2'-0"ø	LENGTH 4'-0"	-	SEE DETAIL 8/-

(A) INDICATES FOOTING PAD SIZE AND REINFORCING.

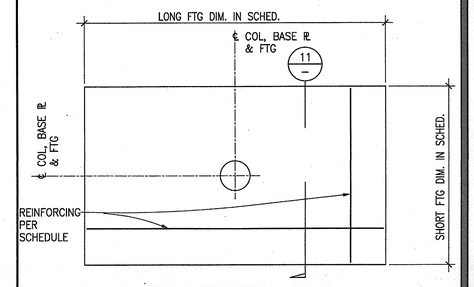

TYPICAL FOOTING PLAN DETAIL

FOOTING SCHEDULE (6)

COLUMN BASE PLATE SCHEDULE		
COLUMN SIZE	BASE PLATE B x N x t	P Allow (KIPS)
3"ø STD PIPE	$8\frac{1}{2}$"x$8\frac{1}{2}$"x$\frac{5}{8}$	30
3.5"ø XS PIPE	9"x9"x$\frac{5}{8}$	30
4"ø XS PIPE	10"x10"x$\frac{5}{8}$	45
HSS5x5	11"x11"x$\frac{5}{8}$	45
5"ø STD PIPE	12"x12"x$\frac{3}{4}$	65
6"ø STD PIPE	12"x12"x1	115
6"ø XS PIPE	12"x12"x1	115
HSS6x4	12"x10"x1	88
HSS6x5	12"x12"x1	85
HSS6x6	12"x12"x1	108
HSS8x6	14"x12"x1	128
HSS12x6	18"x12"x1	165

BASE PLATE SCHEDULE (7)

HEIGHT OF FIXTURE	'd'	'b'	'a'	VERT REINF
LIGHT-POLE 10'-0"	3'-6"	18" DIA	0'-2"	4-#4
LIGHT-POLE 30'-0"	6'-0"	30" DIA	2'-6"	8-#6
FLAG-POLE 40'-0"	6'-6"	18" DIA	N/A	6-#4

NOTE:
1. FOOTING DESIGN IS BASED ON NON-CONSTRAINED CONDITION USING 150 PSF/FT ALLOWABLE LATERAL BEARING PRESSURE.

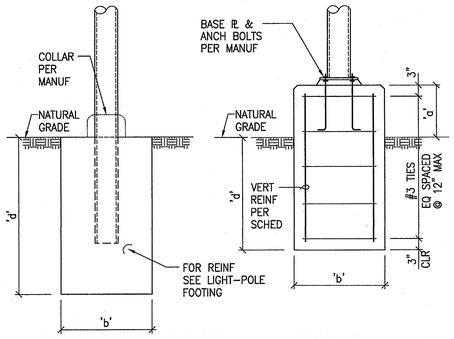

FLAG-POLE LIGHT-POLE

FOOTING AT LIGHT FIXTURES / FLAG-POLE (9)

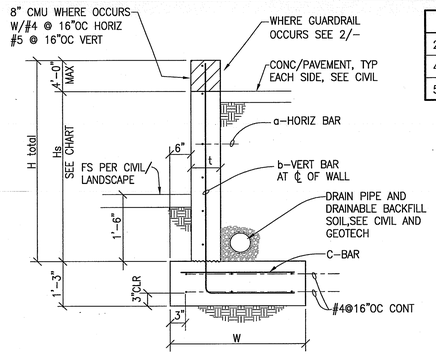

H	W	a	b	c	d	t
2'-6" TO 4'-0"	3'-0"	#4 @ 16"	#5 @ 16"	#4 @ 16"		8"
4'-1" TO 5'-0"	3'-0"	#4 @ 16"	#5 @ 16"	#4 @ 16"		8"
5'-1" TO 6'-0"	4'-0"	#4 @ 16"	#5 @ 16"	#4 @ 16"		8"

NOTES:
1. SEE ARCH/CIVIL DRAWINGS FOR ALL LOCATIONS, DIMENSIONS, ELEVATIONS, ETC FOR ALL WALLS.
2. SEE ARCH/LANDSCAPE DRAWINGS FOR FINISHES.
3. SEE ARCH/LADSCAPE DRAWINGS FOR INSERTS, FASTENERS, ETC REQUIRED FOR ALL FINISHES, INCLUDING STONEWORK.
4. SEE ARCH/CIVIL FOR DRAINS.

CONCRETE RETAINING WALL SCHEDULE (ONE LAYER REINF) (14)

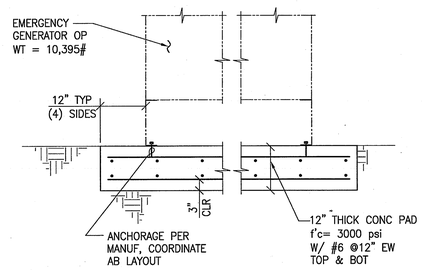

NOTES:
1. PAD SHALL BE 6'-3"x14'-4" MIN COORDINATE. SIZE W/ MANUF
2. OP WT INCLUDES FUEL TANK (FILLED) & STEEL SOUND ENCLOSURE

EMERGENCY GENERATOR CONCRETE PAD DETAIL (13)

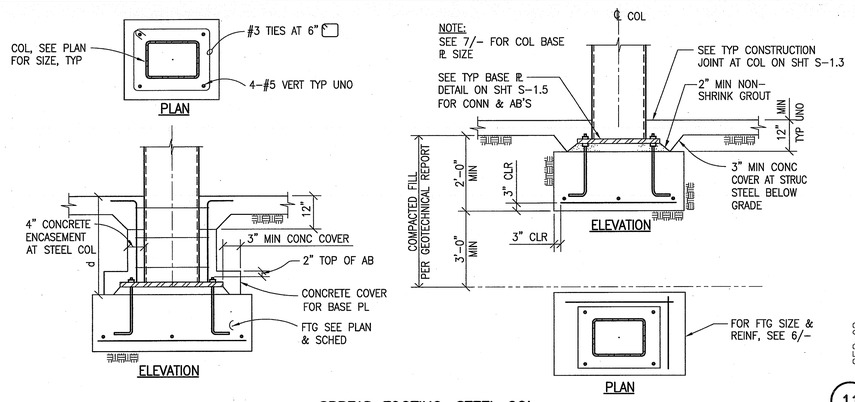

SPREAD FOOTING, STEEL COL (11)

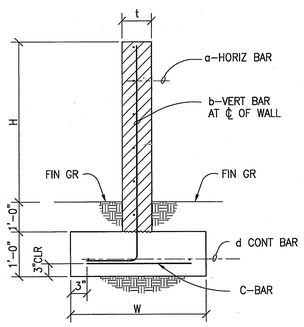

H	W	a	b	c	d	NOMINAL t
5'-6" TO 6'-6"	3'-0"	#5 @ 24"	#5 @ 24"	#5 @ 24"	3-#5	8"
11'-6" TO 12'-6"	4'-6"	#5 @ 24"	#6 @ 16"	#5 @ 24"	3-#6	8"*

* FOR "H" > 11'-0", MASONRY f'm=2,500 psi.

MF1-08

FREESTANDING MASONRY WALL SCHEDULE (19)

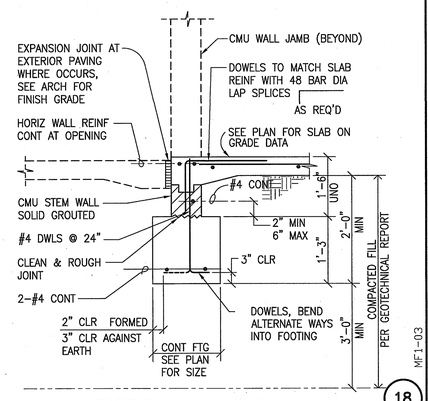

FOOTING AT WALL OPENING (18)

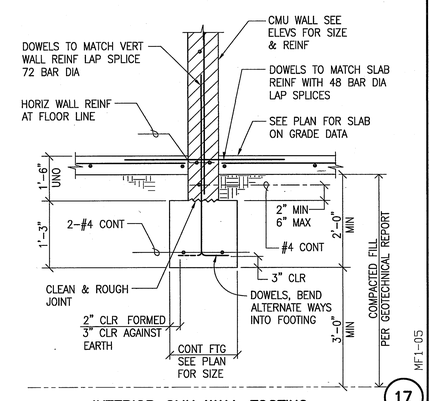

INTERIOR CMU WALL FOOTING (17)

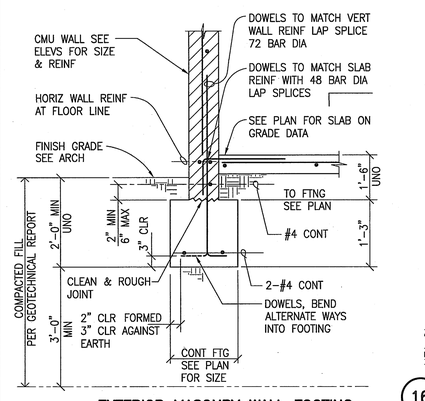

EXTERIOR MASONRY WALL FOOTING (16)

County of Orange
OC PUBLIC WORKS
Architecture & Engineering

Revisions			
Sym.	Descrip.	Date	By

Consultants
MARTIN & Associates
JOHN A. MARTIN & ASSOCIATES
Structural Engineers
617 West 7th Street, 6th Floor
Los Angeles, Calif. 90015
Phone (213) 488-9484
Fax. (213) 488-9486
12190

Drawn.	Chkd.	Date 11-26-09

A-E Seal

A-E ALEXANDER + HIBBS, AIA, INC.
ALEXANDER HIBBS AIA INC
Design DF | Chkd. AH | Date NOV 26, 2009

Sht Title FOUNDATION SCHEDULE & DETAILS
Project COUNTY OF ORANGE HEALTH CARE AGENCY
401 SOUTH TUSTIN STREET
401 SOUTH TUSTIN STREET
ORANGE, CA 92866
PROJ. NO. 100-042-P210-4200

Plan No. 52333-03608
Sheet S-4.1