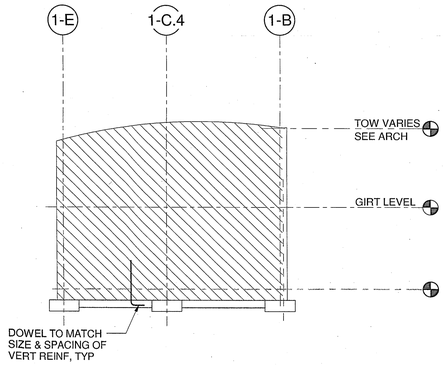

C CMU WALL ELEVATION - LINE 1-10
1/8" = 1'-0"

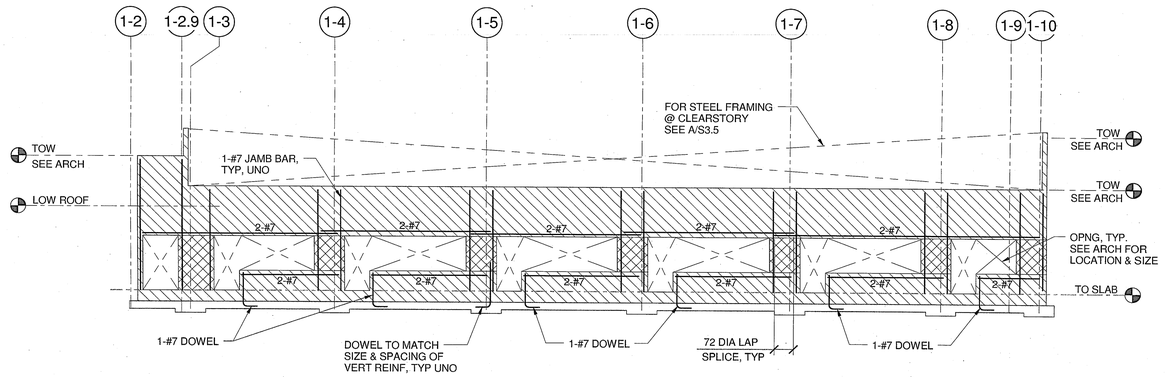

B CMU WALL ELEVATION - LINE 1-B
1/8" = 1'-0"

SHEAR WALL ELEVATION NOTES:

1. INDICATES EXTENT OF SPECIAL HORIZONTAL PIER REINFORCEMENT, SEE 1/S-1.4
2. FOR HORIZ BAR EXTENSION AT OPENINGS, SEE 7/S-1.4 ON ELEVATIONS
3. FOR TOP OF FOOTING SEE FOUNDATION PLAN AND DETAILS ON SHEET S-1.4
4. FOR ROOF ELEVATIONS, SEE FRAMING PLANS
5. PERPENDICULAR CMU WALLS NOT SHOWN FOR CLARITY
6. LOCATE VERTICAL FOOTING DOWELS TO CLEAR COLUMN BASE PLATES

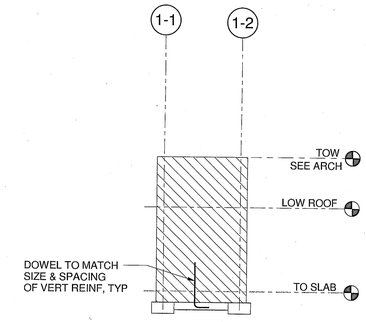

A CMU WALL ELEVATION - LINE 1-A
1/8" = 1'-0"

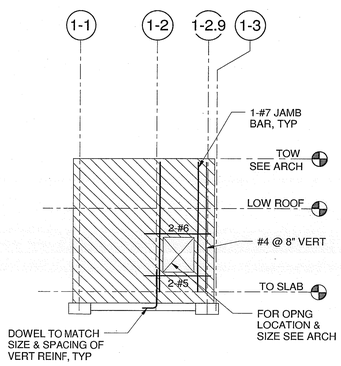

F CMU WALL ELEVATION - LINE 1-G
1/8" = 1'-0"

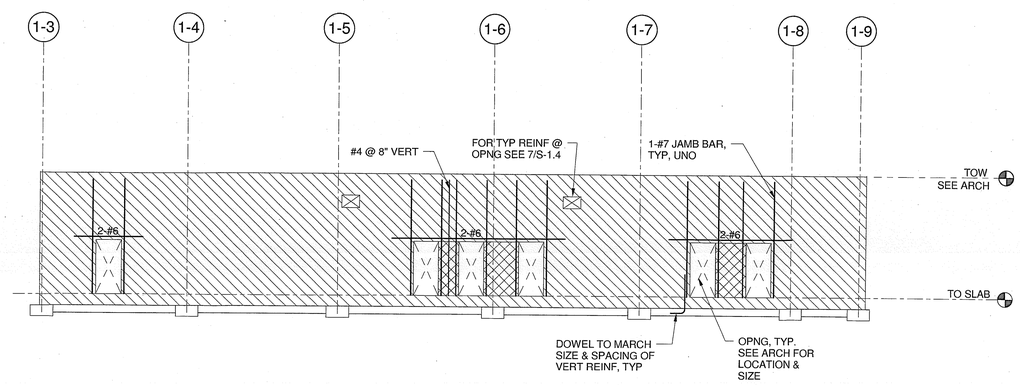

E CMU WALL ELEVATION - LINE 1-F
1/8" = 1'-0"

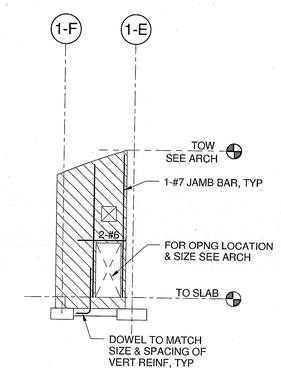

D CMU WALL ELEVATION - LINE 1-9
1/8" = 1'-0"

ALL WALLS SHALL BE 8" CMU W/#4 @16" HORIZ & VERT REINF, UNO ON ELEVATION

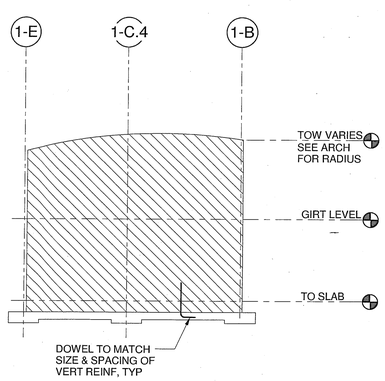

K CMU WALL ELEVATION - LINE 1-6
1/8" = 1'-0"

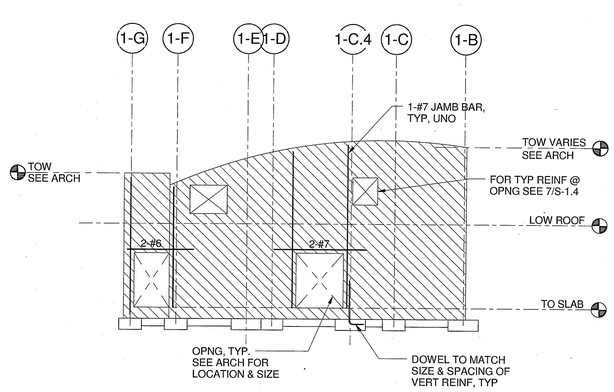

J CMU WALL ELEVATION - LINE 1-3
1/8" = 1'-0"

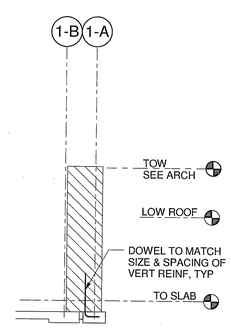

H CMU WALL ELEVATION - LINE 1-2
1/8" = 1'-0"

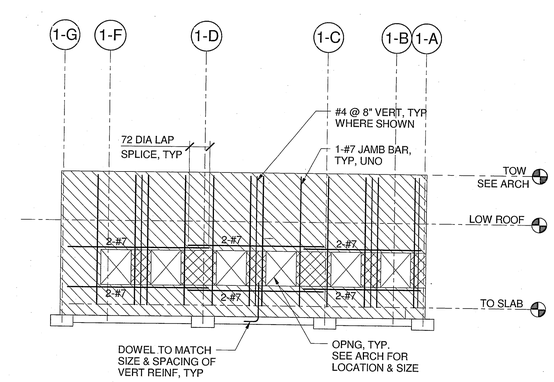

G CMU WALL ELEVATION - LINE 1-1
1/8" = 1'-0"

County of Orange
OC PUBLIC WORKS
Architecture & Engineering

Revisions

Sym.	Descrip.	Date	By

Consultants

JOHN A. MARTIN & ASSOCIATES
Structural Engineers
950 S. Grand Avenue
Los Angeles, Calif. 90015
Phone (213) 483-3456
Fax (213) 483-3064

Drawn | Chkd. | Date 11/02/09

REGISTERED PROFESSIONAL ENGINEER JACQUELINE VINEYARD No. 4412 Exp. 12/31/10 STRUCTURAL STATE OF CALIFORNIA

A-E Seal

A-E

ALEXANDER + HIBBS, AIA, INC.
ALEXANDER + HIBBS, AIA, INC.
Architecture and Planning
400 S. Fairview Street
Santa Ana, California 92704
(714) 549-0808

Design | Chkd. | Date NOV. 20, 2009

Sht Title BUILDING 1 - SHEAR WALL ELEVATIONS
Project COUNTY OF ORANGE HEALTH CARE AGENCY
401 SOUTH TUSTIN STREET
401 SOUTH TUSTIN STREET
ORANGE, CA 92866
PROJ. NO. 100-042-P210-4200

Plan No.
52333-03608

Sheet
S-3.1.1