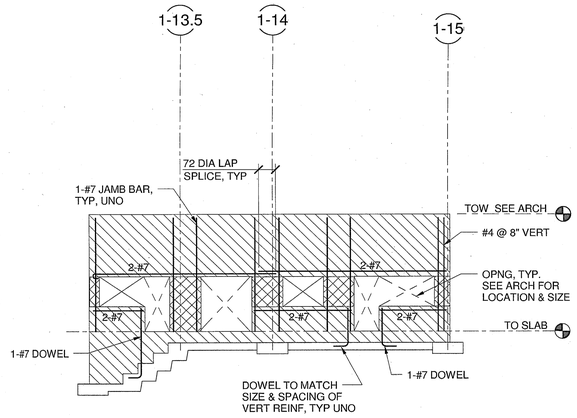

C CMU WALL ELEVATION - LINE 1-L
1/8" = 1'-0"

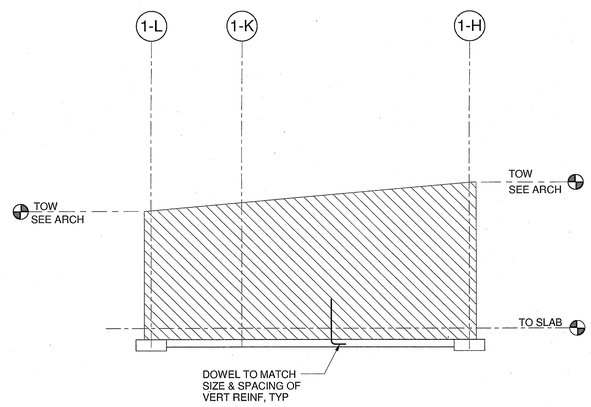

B CMU WALL ELEVATION - LINE 1-15
1/8" = 1'-0"

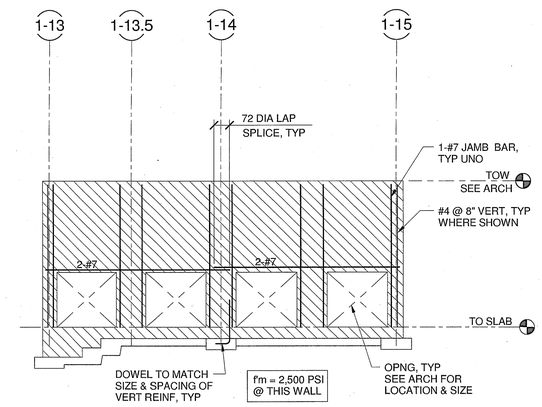

A CMU WALL ELEVATION - LINE 1-H
1/8" = 1'-0"

ALL WALLS SHALL BE 8" CMU W/#4 @16" HORIZ & VERT REINF, UNO ON ELEVATION

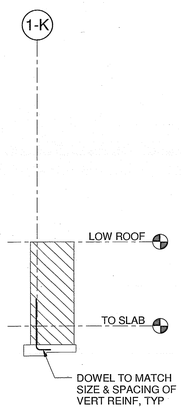

G CMU WALL ELEVATION - LINE 1-13.5
1/8" = 1'-0"

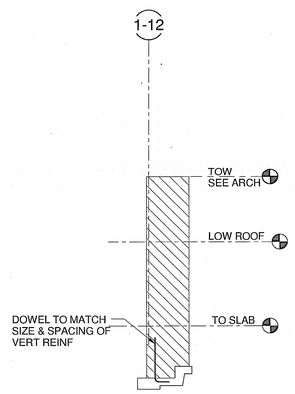

F CMU WALL ELEVATION - LINE 1-J
1/8" = 1'-0"

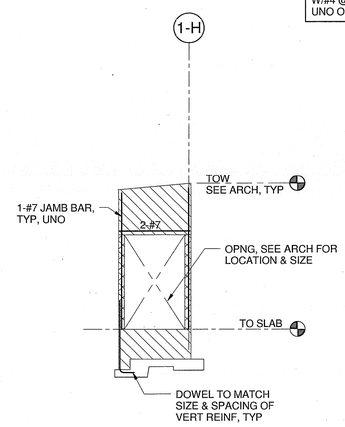

E CMU WALL ELEVATION - LINE 1-13
1/8" = 1'-0"

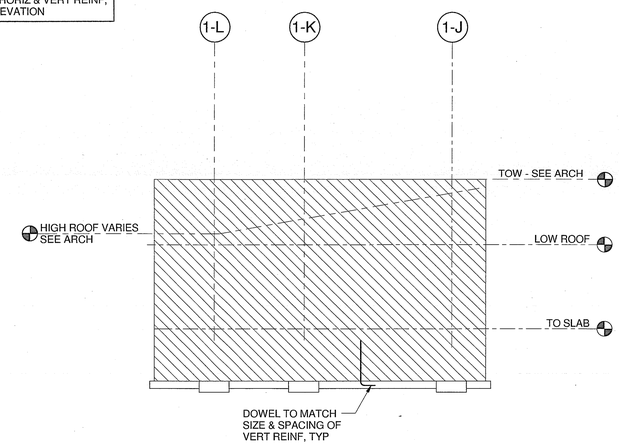

D CMU WALL ELEVATION - LINE 1-12
1/8" = 1'-0"

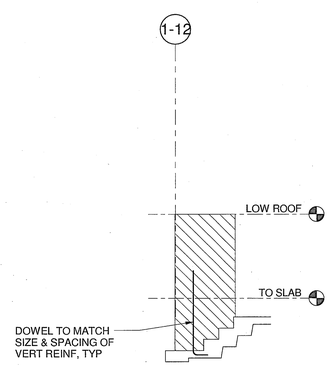

H CMU WALL ELEVATION - LINE 1-K
1/8" = 1'-0"

SHEAR WALL ELEVATION NOTES:

1. INDICATES EXTENT OF SPECIAL HORIZONTAL PIER REINFORCEMENT, SEE 1/S-1.4
2. FOR HORIZ BAR EXTENSION AT OPENINGS, SEE 7/S-1.4 ON ELEVATIONS
3. FOR TOP OF FOOTING SEE FOUNDATION PLAN AND DETAILS ON SHEET S-1.4
4. FOR ROOF ELEVATIONS, SEE FRAMING PLANS
5. PERPENDICULAR CMU WALLS NOT SHOWN FOR CLARITY
6. LOCATE VERTICAL FOOTING DOWELS TO CLEAR COLUMN BASE PLATES

County of Orange
OC PUBLIC WORKS
Architecture & Engineering

Revisions

Sym.	Descrip.	Date	By

Consultants
JOHN A. MARTIN & ASSOCIATES
Structural Engineers
950 S. Grand Avenue
Los Angeles, Calif. 90015
Phone (213) 483-3050
Fax (213) 483-3084
12190

Drawn.	Chkd.	Date 11:26:09

A-E Seal
REGISTERED PROFESSIONAL ENGINEER
GUILLERME VINAYA
No. 4412
Exp. 12-31-10
STRUCTURAL
STATE OF CALIFORNIA

A-E ALEXANDER + HIBBS, AIA, INC.
ALEXANDER + HIBBS, AIA, INC.
Architecture and Planning
Alexander + Hibbs, AIA, Inc.
Architecture, Planning & Interior Design
(714) 479-0860

Design	Chkd.	Date NOV. 26, 2009

Sht Title BUILDING 1 - SHEAR WALL ELEVATIONS
Project COUNTY OF ORANGE HEALTH CARE AGENCY
401 SOUTH TUSTIN STREET
401 SOUTH TUSTIN STREET
ORANGE, CA 92866
PROJ. NO. 100-042-P210-4200

Plan No.
52333-03608

Sheet
S-3.1.2