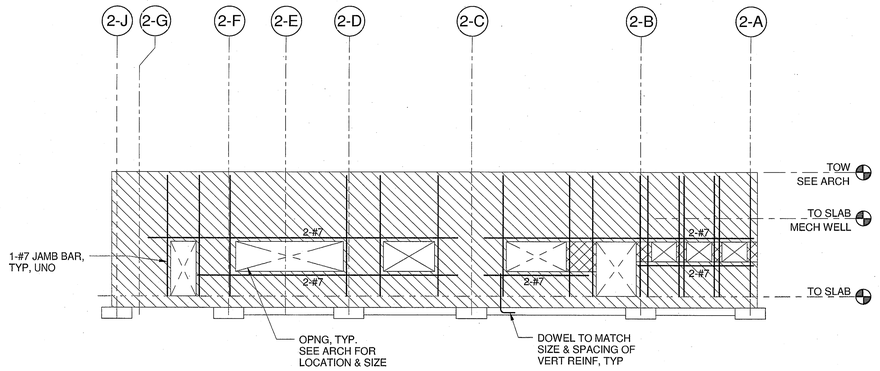

B CMU WALL ELEVATION - LINE 2-5
1/8" = 1'-0"

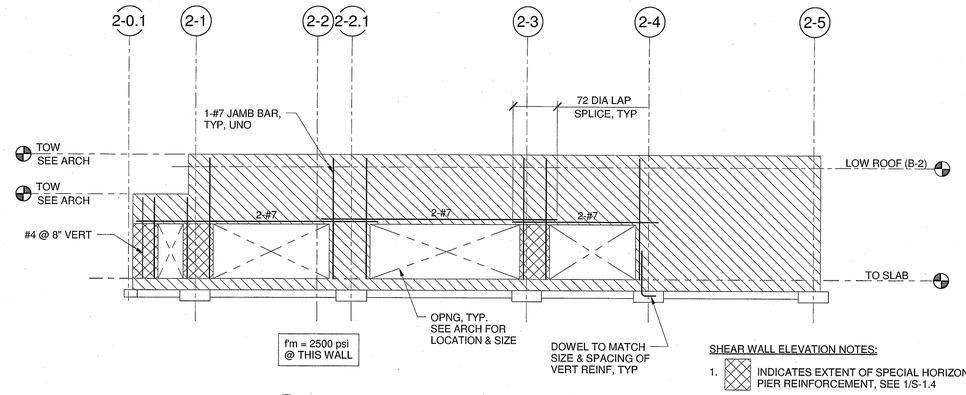

A CMU WALL ELEVATION - LINE 2-A
1/8" = 1'-0"

ALL WALLS SHALL BE 8" CMU W/#4 @16" HORIZ & VERT REINF, UNO ON ELEVATION

SHEAR WALL ELEVATION NOTES:

1. INDICATES EXTENT OF SPECIAL HORIZONTAL PIER REINFORCEMENT, SEE 1/S-1.4
2. FOR HORIZ BAR EXTENSION AT OPENINGS, SEE 7/S-1.4 ON ELEVATIONS
3. FOR TOP OF FOOTING SEE FOUNDATION PLAN AND DETAILS ON SHEET S-1.4
4. FOR ROOF ELEVATIONS, SEE FRAMING PLANS
5. PERPENDICULAR CMU WALLS NOT SHOWN FOR CLARITY
6. LOCATE VERTICAL FOOTING DOWELS TO CLEAR COLUMN BASE PLATES

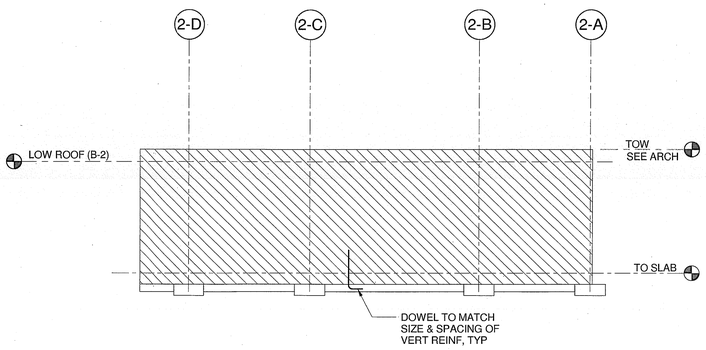

F CMU WALL ELEVATION - LINE 2-1
1/8" = 1'-0"

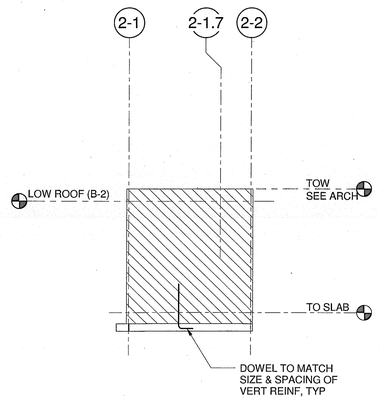

E CMU WALL ELEVATION - LINE 2-E
1/8" = 1'-0"

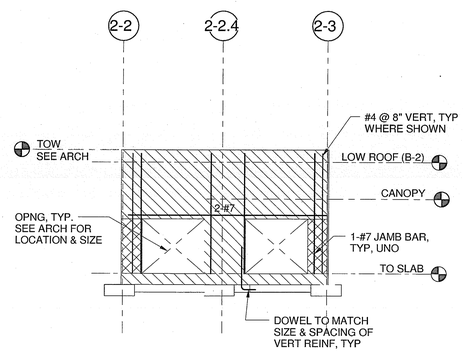

D CMU WALL ELEVATION - LINE 2-H
1/8" = 1'-0"

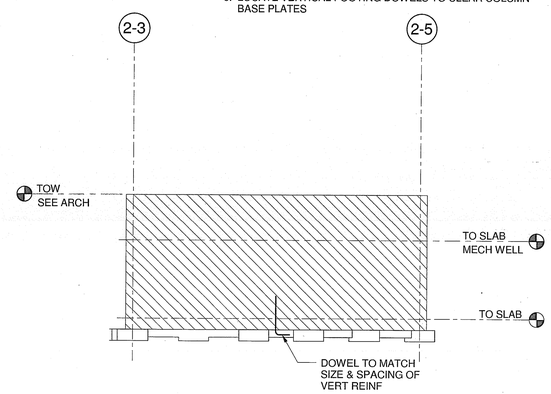

C CMU WALL ELEVATION - LINE 2-J
1/8" = 1'-0"

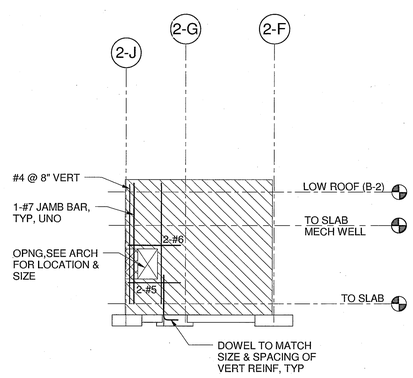

J CMU WALL ELEVATION - LINE 2-3
1/8" = 1'-0"

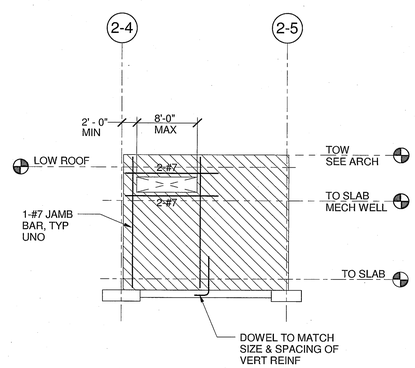

H CMU WALL ELEVATION - LINE 2-F
1/8" = 1'-0"

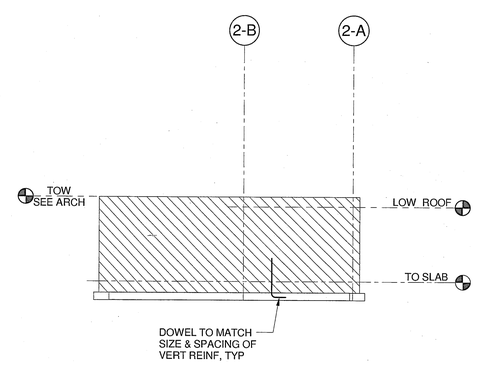

G CMU WALL ELEVATION - LINE 2-0.1
1/8" = 1'-0"

County of Orange
OC PUBLIC WORKS
Architecture & Engineering

Revisions

Sym.	Descrip.	Date	By

Consultants
JOHN A. MARTIN & ASSOCIATES
Structural Engineers
950 S. Grand Avenue
Los Angeles, Calif. 90015
Phone: (213) 483-3234
Fax: (213) 483-3284
12150

Drawn ___ Chkd. ___ Date 11/5/09

A-E Seal
REGISTERED PROFESSIONAL ENGINEER
KAUSHARE VIRKAR
No. 4412
Exp. 12/31/10
STRUCTURAL
STATE OF CALIFORNIA

A-E ALEXANDER + HIBBS, AIA, INC.
ALEXANDER + HIBBS AIA, INC
Architecture and Planning
1000 Quail Street, Suite 100
Newport Beach, California 92660
949 752-0880

Design ___ Chkd. ___ Date NOV. 26, 2009

Sht Title BUILDING 2 - SHEAR WALL ELEVATIONS
Project COUNTY OF ORANGE HEALTH CARE AGENCY
401 SOUTH TUSTIN STREET
401 SOUTH TUSTIN STREET
ORANGE, CA 92866
PROJ. NO. 100-042-P210-4200

Plan No.
52333-03608

Sheet
S-3.2