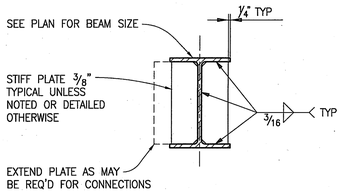

USE LARGER PLATE AND WELD AS MAY BE REQ'D BY BEAM CONN SCHEDULE

STIFFENER PLATES (5)

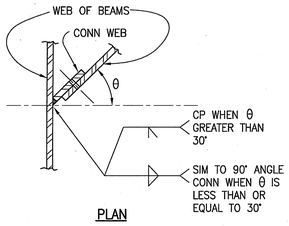

PLAN

NOTE: SEE BEAM TO BEAM CONN DETAILS FOR REMAINDER OF DETAIL.

SC2-11

TYPICAL SKEWED BEAM CONNECTION (4)

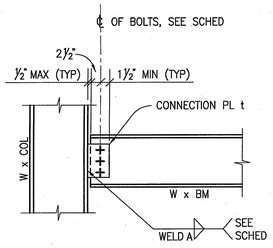

BEAM TO COLUMN FLANGE (A)

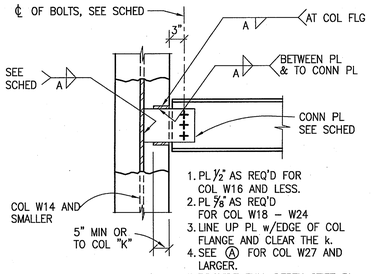

1. PL 1/2" AS REQ'D FOR COL W16 AND LESS.
2. PL 5/8" AS REQ'D FOR COL W18 – W24
3. LINE UP PL w/EDGE OF COL FLANGE AND CLEAR THE k.
4. SEE (A) FOR COL W27 AND LARGER.
5. PROVIDE FULL DEPTH STIFF PL AT COL LARGER THAN W14. PROVIDE WELD 'A' AT PLATE TO COL WEB.

BEAM TO COLUMN WEB (B)

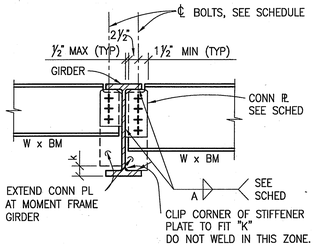

TYPICAL BEAM (C)

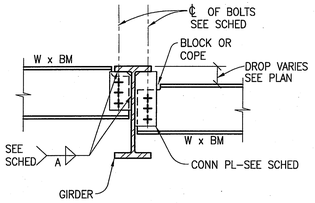

DROPPED BEAM (D)

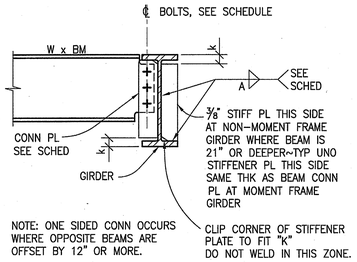

NOTE: ONE SIDED CONN OCCURS WHERE OPPOSITE BEAMS ARE OFFSET BY 12" OR MORE.

ONE SIDE BEAM CONNECTION (E)

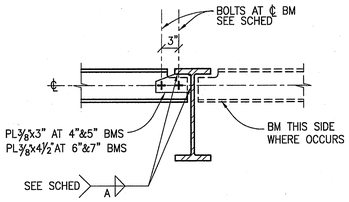

BEAM 4" TO 7" (F)

SIMPLE BEAM CONNECTION SCHEDULE			
SHEAR PL CONNECTION			
MEMBER (DEPTH)	# OF BOLTS 1"ø A325	CONN PL t	WELD SIZE A
< 8"	2	5/16"	1/4"
8" – 10"	2	5/16"	1/4"
12" – 14"	3	5/16"	1/4"
15" – 16"	4	3/8"	5/16"
18"	5	3/8"	5/16"
20" & 21"	5	1/2"	3/8"
24"	6	1/2"	3/8"
27"	7	1/2"	3/8"
30" & 33"	8	5/8"	3/8"
36"	10	5/8"	3/8"

NOTES:

1. FILLET WELD SIZE SHALL BE AS SHOWN UNLESS A GREATER SIZE IS REQUIRED BY AISC TABLE J2.4.
2. ALL BOLTS ARE 1"ø (UNLESS NOTED OTHERWISE) AND ARE TO BE A 325 BOLTS, SLIP CRITICAL (SC).
3. DOUBLE ANGLES MAY BE SUBSTITUTED FOR CONNECTOR PLATES, PROVIDED THEY MEET OR EXCEED THE REQUIREMENTS OF THE AISC.

SC1-08

SIMPLE BEAM CONNECTION DETAILS (6)

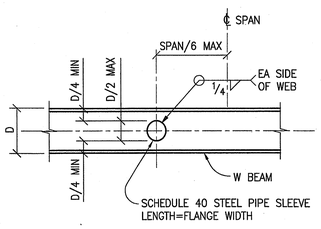

NOTE: WHERE ROUND OPENINGS ARE D/6 OR LESS, REINFORCING SHOWN IS NOT REQUIRED.

SP1-01

DETAIL AT ROUND OPENING (10)

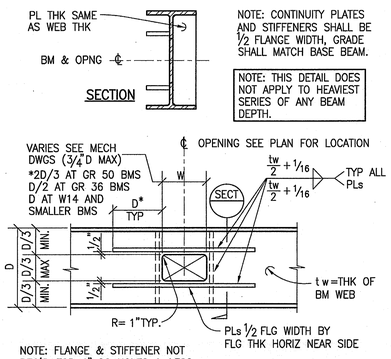

NOTE: CONTINUITY PLATES AND STIFFENERS SHALL BE 1/2 FLANGE WIDTH, GRADE SHALL MATCH BASE BEAM.

NOTE: THIS DETAIL DOES NOT APPLY TO HEAVIEST SERIES OF ANY BEAM DEPTH.

NOTE: FLANGE & STIFFENER NOT REQ'D FOR 4" SQ HOLES & LESS IN W12 OR DEEPER.

SP1-02

TYPICAL HOLE THRU BEAM WEB DETAIL (9)

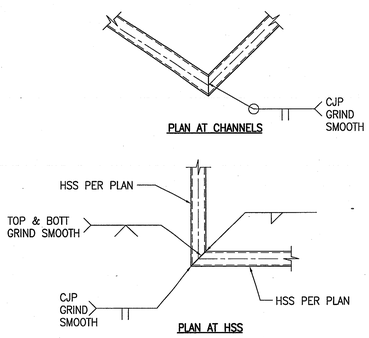

TYPICAL PLAN AT MITERED CORNERS (15)

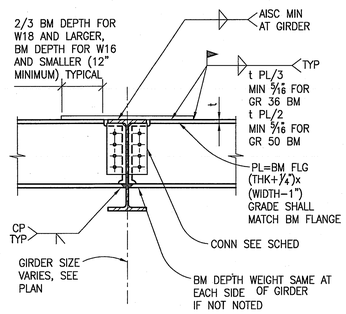

SR3-01

MOMENT CONNECTION BEAM TO BEAM (14)

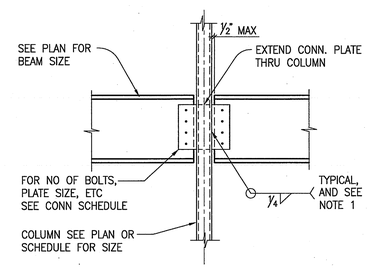

NOTES:
1. USE LARGER PLATE AND WELDS AS MAY BE REQ'D BY BEAM CONN SCHED OR BY AISC SPECIFICATION SECTION J2 WELDS.
2. 2 SIDED CONN SHOWN, ONE SIDED CONN IS SIM (CONN PLATE SHALL BE EXTENDED THRU COL FOR ONE SIDED CONN).

SC3-03

BEAM TO PIPE OR TS COLUMN (13)

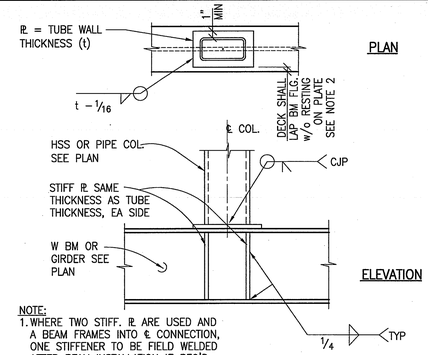

NOTE:
1. WHERE TWO STIFF. PL ARE USED AND A BEAM FRAMES INTO ℄ CONNECTION, ONE STIFFENER TO BE FIELD WELDED AFTER BEAM INSTALLATION IF REQ'D. (USE 3/8" FILLET ONE SIDE)
2. WHERE LAP DOES NOT ALLOW 2" BEARING TO BEAM FLANGE, REINFORCE DECK PER 3/S1.6

CARRIED COLUMN – WELDED CONNECTION (12)

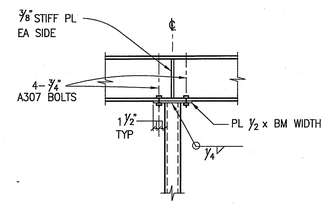

SC3-09

BEAM CONTINUED OVER COLUMN (11)

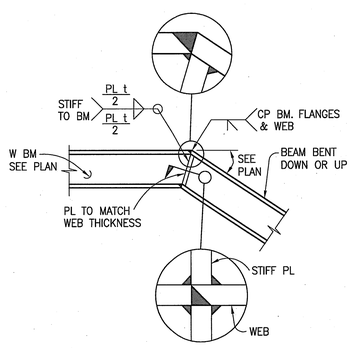

SM1-08

BENT BEAM DETAIL (20)

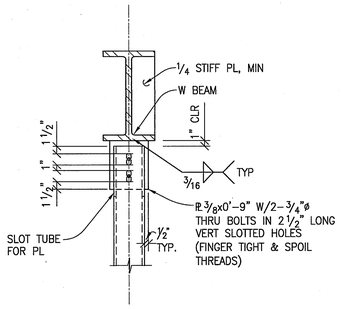

TYPICAL TS SLIP CONNECTION (19)

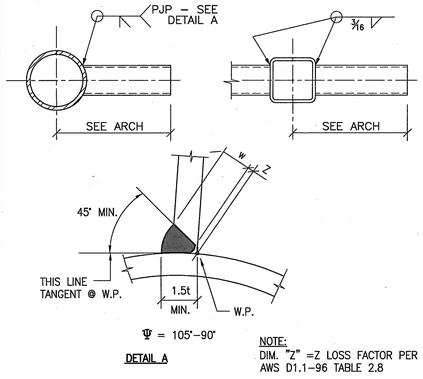

NOTE:
DIM. "Z" =Z LOSS FACTOR PER AWS D1.1–96 TABLE 2.8

CANTILEVER TUBE MOMENT CONNECTION (18)

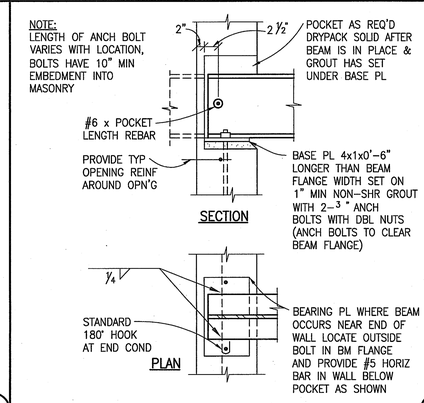

SC5-07

BEAM CONNECTION AT CONCRETE OR MASONRY WALL (17)

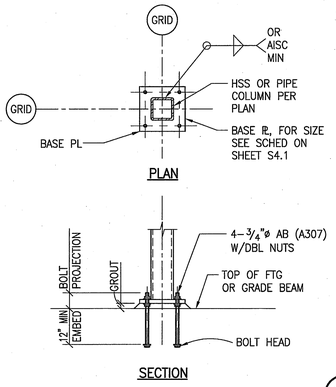

SB1-12

TYPICAL BASE PLATE (16)

County of Orange
OC PUBLIC WORKS
Architecture & Engineering

Revisions			
Sym.	Descrip.	Date	By

Consultants
MARTIN & associates
JOHN A. MARTIN & ASSOCIATES
Structural Engineers
850 S. Grand Avenue
Los Angeles, CA 90017
Phone (213) 483-6490
Fax (213) 483-0984
12160

A-E Seal
REGISTERED PROFESSIONAL ENGINEER
No. 41931
STRUCTURAL
STATE OF CALIFORNIA

A-E ALEXANDER + HIBBS, AIA, INC.
ALEXANDER + HIBBS AIA, INC.
Architecture and Planning
401 South Tustin Avenue
Santa Ana, California 92705-3896

Design	DF	Chkd.	AH	Date	NOV 26, 2009
Drawn	FCS	Chkd.	DD	Date	11-26-09

Sht Title TYPICAL STEEL DETAILS
Project COUNTY OF ORANGE HEALTH CARE AGENCY
401 SOUTH TUSTIN STREET
401 SOUTH TUSTIN STREET
ORANGE, CA 92866
PROJ. NO. 100-042-P210-4200

Plan No. 52333-03608

Sheet S-1.5