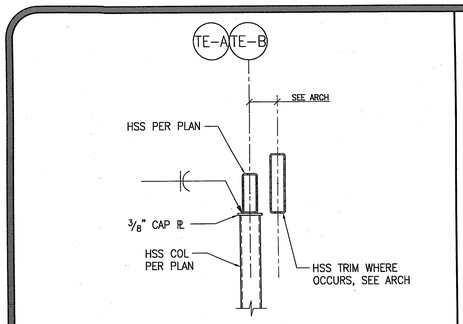

BM TO COL CONNECTION AT TRASH ENCLOSURE (5)

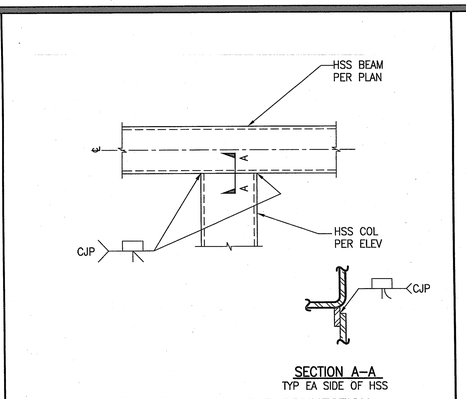

HSS BEAM TO COLUMN MOMENT CONNECTION AT CLERESTORIES AND TOWERS (4)

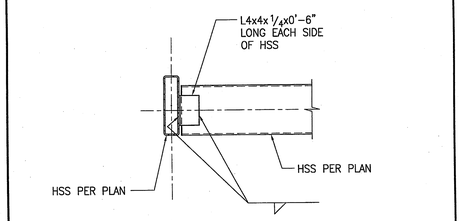

HSS BM TO BM CONNECTION AT TRASH ENCLOSURE (3)

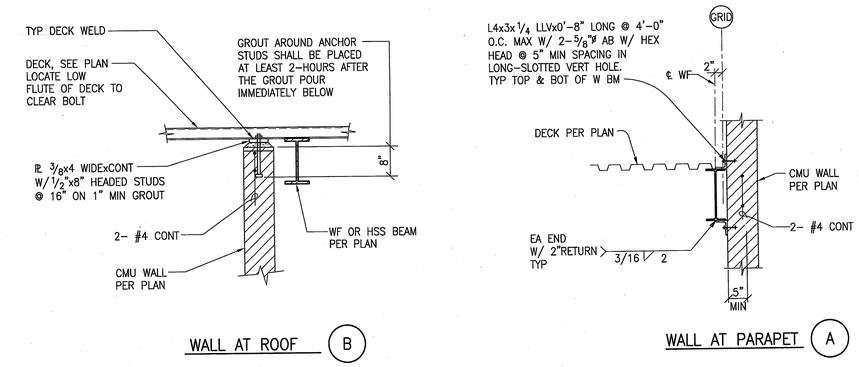

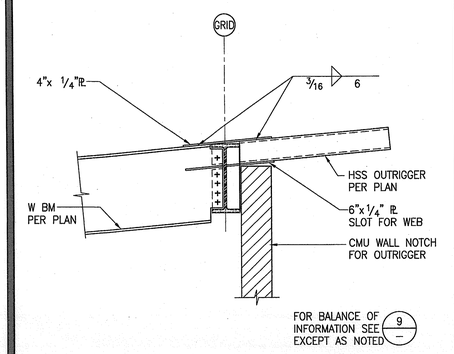

ROOF OUTRIGGER CONNECTION – BLDG #1 (10)

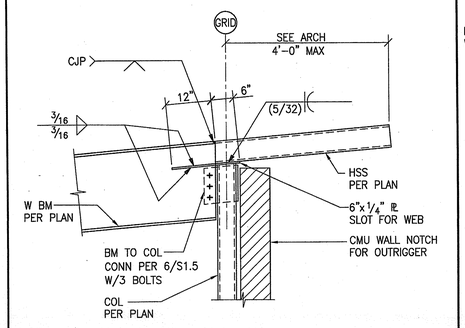

ROOF OUTRIGGER CONNECTION – BLDG #1 (9)

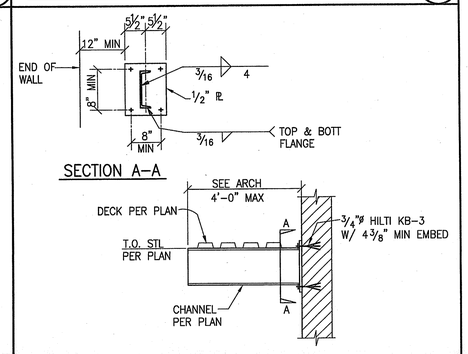

TYP. CANOPY OUTRIGGER
BLDGS 1 & 2 (8)

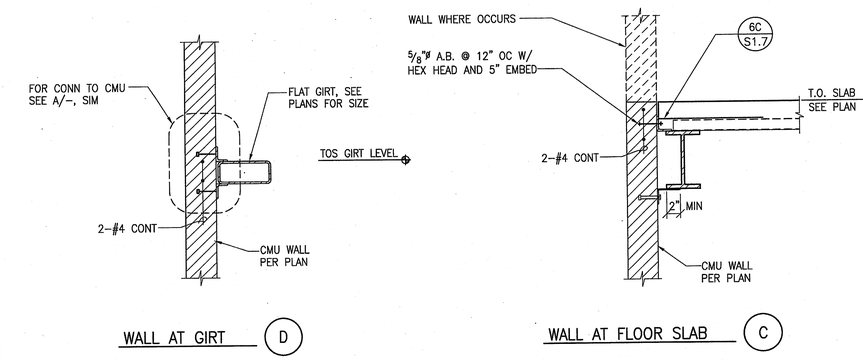

NOTE:
FOR WALL REINF SEE WALL ELEVATIONS.

MASONRY WALL ANCHORAGE (6)
3/4" = 1'-0"

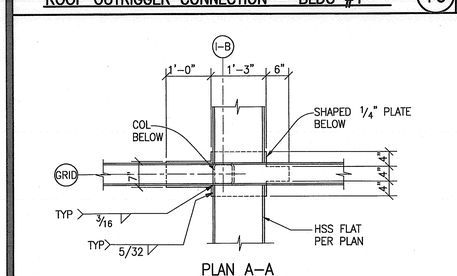

PLAN A-A

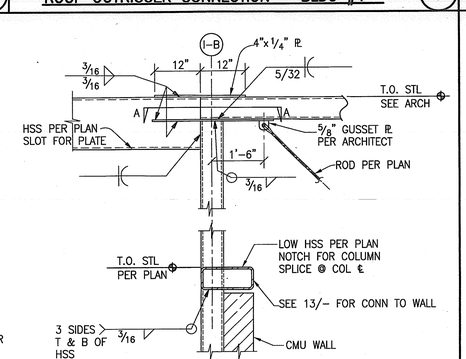

NOTE:
1. HIGH HSS NOT SHOWN FOR CLARITY, SEE PLAN A-A
2. BEAMS SHOWN FLAT. SEE ARCH FOR CURVATURE.

BM TO COL CONNECTION
BLDG #1 (14)

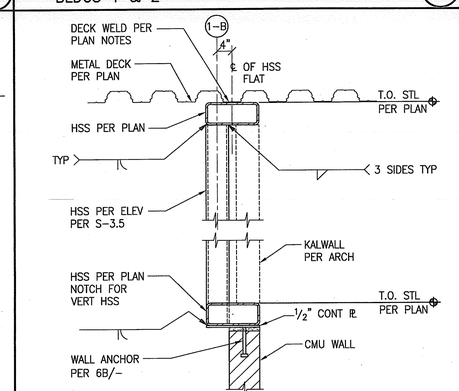

HSS FRAME AT CLERESTORY
BLDG #1 (13)

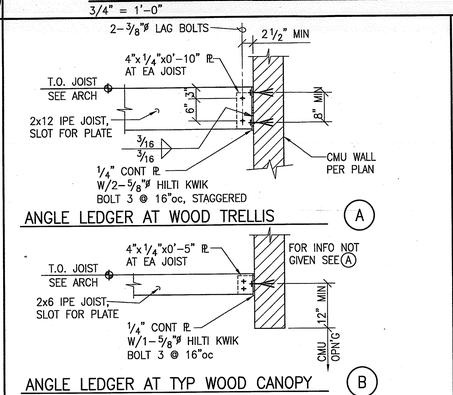

WOOD TRELLIS TO CMU WALL DETAIL – BLDG #3 (12)

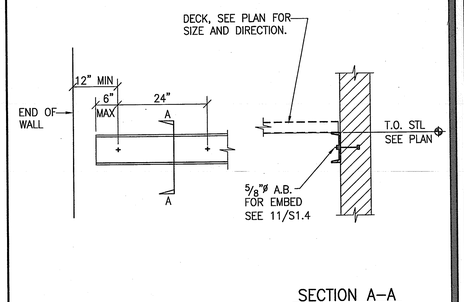

TYP CHANNEL LEDGER (11)

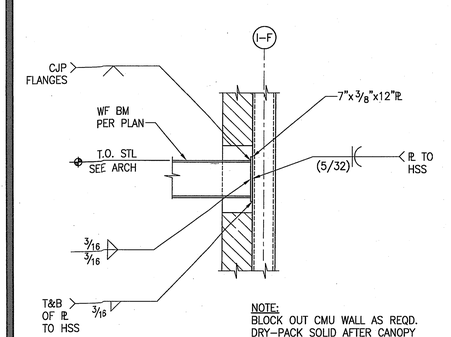

NOTE:
BLOCK OUT CMU WALL AS REQD. DRY-PACK SOLID AFTER CANOPY BM IS IN PLACE.

BM TO COL CONNECTION AT SOUTH CANOPY BLDG #1 (20)

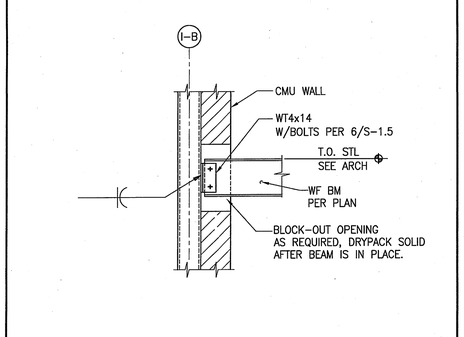

BM TO COL CONNECTION AT NORTH CANOPY BLDG #1 (19)

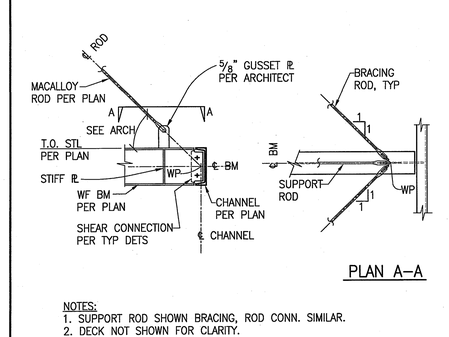

NOTES:
1. SUPPORT ROD SHOWN BRACING, ROD CONN. SIMILAR.
2. DECK NOT SHOWN FOR CLARITY.

MACALLOY TENSION ROD CONNECTION
BLDGS #1 CANOPY (18)

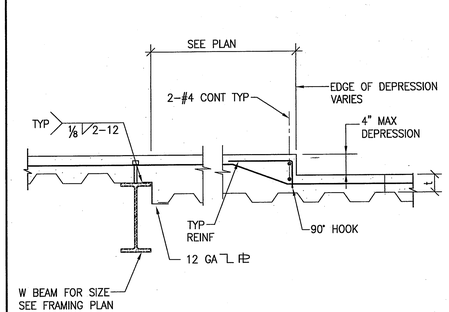

DEPRESSION AT MIDSPAN
DECK FLUTES PARALLEL
TO BEAM SUPPORT (17)

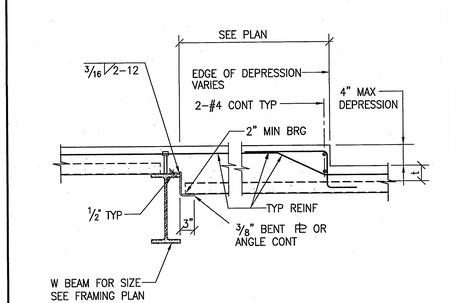

DEPRESSION AT MIDSPAN
DECK FLUTES PERPENDICULAR
TO BEAM SUPPORT (16)

County of Orange
OC PUBLIC WORKS
Architecture & Engineering

Revisions

Sym.	Descrip.	Date	By

Consultants
JOHN A. MARTIN & ASSOCIATES
Structural Engineers
950 S. Grand Avenue
Los Angeles, CA 90015
Phone (213) 483-9490
Fax (213) 483-5200
Drawn FSB | Chkd. | Date 12/28/09

A-E Seal
REGISTERED PROFESSIONAL ENGINEER JACQUELINE VINING No. 6412 Exp. 6-30-10 STRUCTURAL STATE OF CALIFORNIA

A-E
ALEXANDER + HIBBS, AIA, INC.
ALEXANDER + HIBBS, AIA, INC.
Architecture and Planning
1000 Quail Street, Suite 100
Newport Beach, California 92660
Chkd. AH | Date NOV 26, 2009
Design DF

Sht Title MISCELLANEOUS DETAILS
Project COUNTY OF ORANGE HEALTH CARE AGENCY
401 SOUTH TUSTIN STREET
401 SOUTH TUSTIN STREET
ORANGE, CA 92866
PROJ. NO. 100-042-P210-4200

Plan No.
52333-03608

Sheet
S-5.1