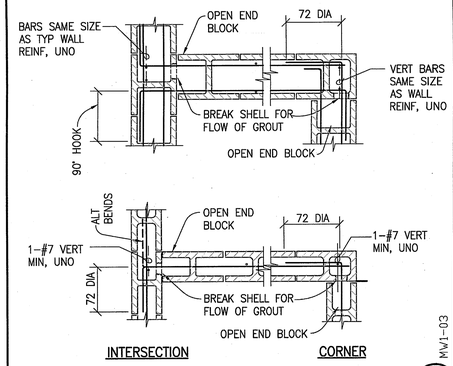

MW1-03

CONCRETE MASONRY WALL INTERSECTIONS

2

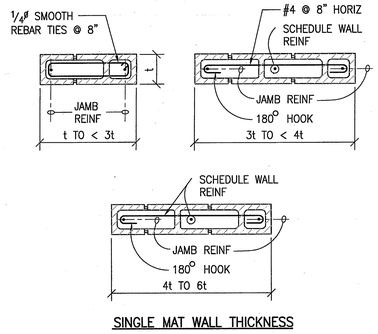

MW2-04

CONCRETE BLOCK WALL PIER

1

LINTEL REINFORCING:
2-#6 FOR OPENINGS LESS THAN 5'-0"
2-#7 FOR OPENINGS 5'-1" TO 7'-0"
2-#8 FOR OPENINGS 7'-1" TO 10'-0"

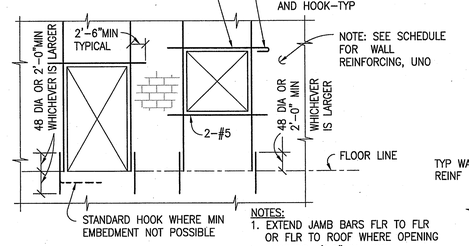

ELEVATION

NOTES:
1. EXTEND JAMB BARS FLR TO FLR OR FLR TO ROOF WHERE OPENING EXCEEDS 4'-0" IN WIDTH OTHERWISE EXTEND 48 DIA OR 2'-0"MIN PAST FACE OF OPENING
2. ADD VERTICAL JAMB BARS AT ALL WALL ENDS.
3. VERT BARS IN SINGLE MAT REINF SHALL BE CENTERED IN WALL, TYP UNO.

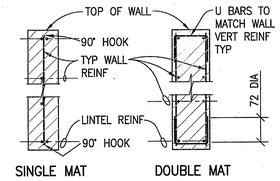

LINTEL AND TOP OF WALL

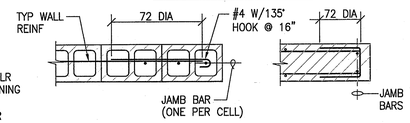

PLAN AT JAMB OR WALL END

MW1-02

MINIMUM REINFORCING AT CONCRETE & MASONRY WALL OPENINGS

7

NOTE: SAWCUT BRICK OR CMU AS REQUIRED.

PROVIDE OPEN END BLOCKS AT CMU WALLS. FILL W/POLYSULPHIDE SEALANT EACH SIDE, SEE SPECIFICATIONS.

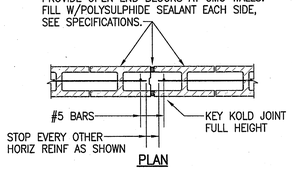

PLAN

NOTES
1. PROVIDE JOINTS AT INTERVALS NOT TO EXCEED 24 FEET EXCEPT AS NOTED.
2. HORIZONTAL REINFORCING AT FLOOR & ROOF LINES SHALL BE CONTINUOUS THROUGH JOINT.
3. CONCRETE BLOCK SHOWN – BRICK SIMILAR.

MW2-06

CONTROL JOINT AT MASONRY WALLS

6

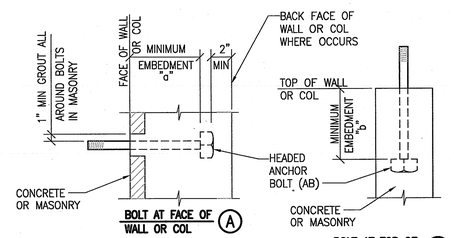

BOLT AT FACE OF WALL OR COL (A)

BOLT AT TOP OF WALL OR COL (B)

A.B./ ROD SIZE	EMBEDMENT "a"	EMBEDMENT "b"
1/2"	4"	10"
5/8"	5"	10"
3/4"	6"	10"
7/8"	7"	11"
1"	8"	12"

NOTE:
DIMENSION OF HEX HEAD SHALL CONFORM TO ANSI/ASME B18.2.1

MC1-06

BOLT EMBEDMENT SCHEDULE

11

County of Orange
OC PUBLIC WORKS
Architecture & Engineering

Sym.	Descrip.	Date	By

Revisions

Consultants
JOHN A. MARTIN & ASSOCIATES
Structural Engineers
950 S. Grand Avenue
Los Angeles, 90015
Phone (213) 485-9490
Fax: (213) 483-0094
12790
MARTIN & associates

Drawn ESS | Chkd. RB | Date 11-25-09

A-E Seal
CERTIFIED PROFESSIONAL ENGINEER
LOUIS ANE VINTZILEOS
No. 4412
Exp. 12-31-11
STRUCTURAL
STATE OF CALIFORNIA

A-E
ALEXANDER + HIBBS, AIA, INC.
ALEXANDER + HIBBS AIA INC
Architecture and Planning
Adaptive Reuse
Historic Preservation
Interiors
Date NOV 26, 2009
Chkd. AH
Design DF

Sht Title TYPICAL MASONRY DETAILS
Project COUNTY OF ORANGE HEALTH CARE AGENCY
401 SOUTH TUSTIN STREET
401 SOUTH TUSTIN STREET
ORANGE, CA 92866
PROJ. NO. 100-042-P210-4200

Plan No.
52333-03608

Sheet
S-1.4