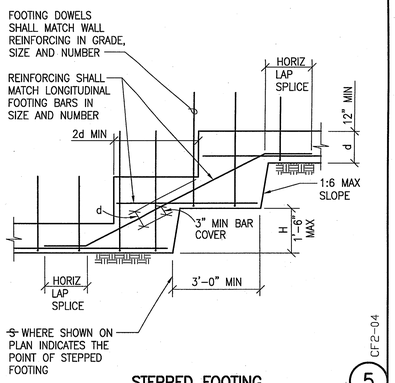

CF2-04

STEPPED FOOTING (5)

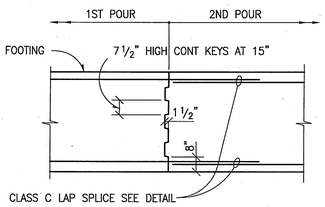

SECTION

NOTE:
WELDED SPLICES REQ'D FOR #14 & LARGER BARS. WHERE CONT FOOTING IS UNDER A WALL, LOCATE CONSTRUCTION JOINT AT 1/4 OF THE CLEAR OPENING WIDTH ABOVE FROM FACE OF OPENING, OR IN MIDDLE 1/3 OF THE DISTANCE BETWEEN COLUMNS.

CF1-08

CONTINUOUS FOOTING CONSTRUCTION JT (4)

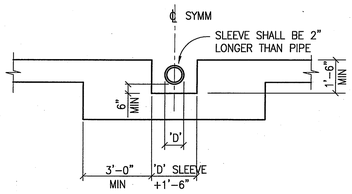

NOTE:
WHERE FOOTING INTERFERES WITH PIPING, FOOTING SHALL BE DROPPED SO PIPING WILL PASS THRU WALL.

CF1-11

DROPPED FOOTING AT PIPING (3)

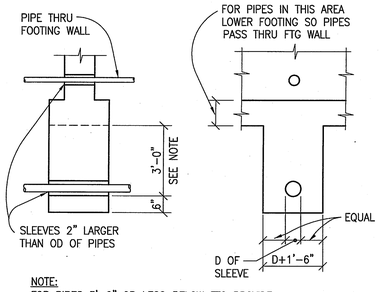

NOTE:
FOR PIPES 3'-0" OR LESS BELOW FTG PROVIDE SLEEVE AND CONCRETE AS SHOWN MORE THAN 3'-0" COMPACT BACKFILL OVER PIPE TO 90% AS APPROVED BY SOILS ENGINEER, OR USE STEPPED FOOTING BELOW PIPE.

CF1-01

EXCAVATION PERPENDICULAR TO FOOTING (2)

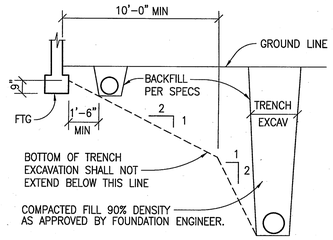

NOTE:
THE CONTRACTOR SHALL BE RESPONSIBLE FOR SHORING, SHEATHING OR OTHERWISE MAINTAINING THE SIDES OF THE EXCAVATION FROM CAVE-INS UNTIL ALL BACKFILL IS COMPLETED PER SPECIFICATIONS

EXCAVATIONS PARALLEL TO FOOTING (1)

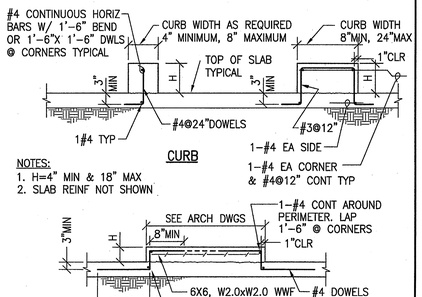

CONCRETE CURBS AND ISLANDS ON SLAB-ON-GRADE (10)

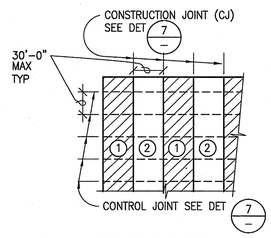

STRIP POUR PATTERN

NOTES: 1. THERE SHALL BE A MINIMUM OF 24 HOURS BETWEEN POURS 1 & 2.
2. CONSTRUCTION JOINTS MUST BE USED AT THE END OF THE DAY'S WORK AND AT EVERY 120 FT.

CS2-05

SLAB ON GRADE POUR PATTERN (9)

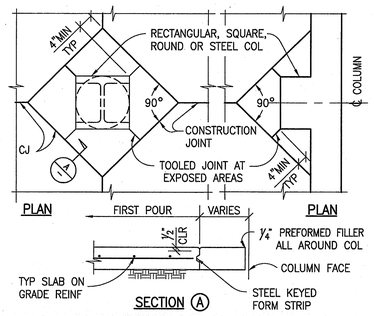

CONSTRUCTION JOINTS IN SLAB ON GRADE AT COLUMN (8)

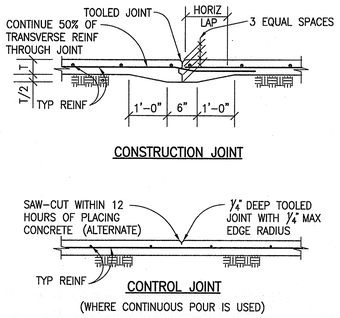

CS2-08 CS1-04

JOINTS IN SLAB ON GRADE (7)

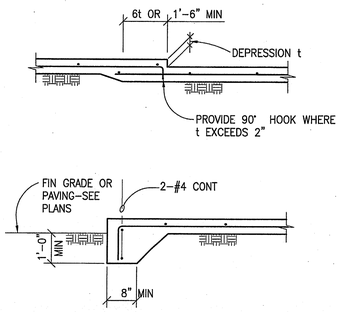

CS1-10

DEPRESSED SLAB AND SLAB EDGE (6)

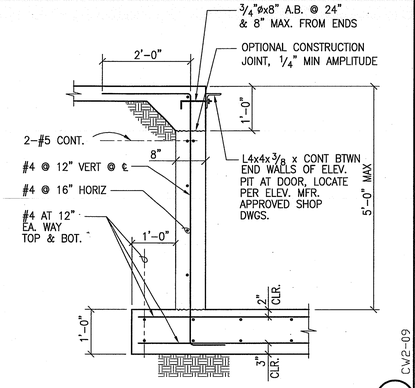

CW2-09

ELEVATOR PIT (15)

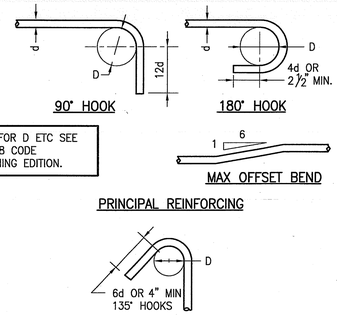

NOTES: 1. ALL BENDS SHALL BE MADE COLD
2. #14 & #18 BARS SHALL BE BEND-TESTED AND APPROVED PRIOR TO BENDING

CR2-08

BAR BENDS (14)

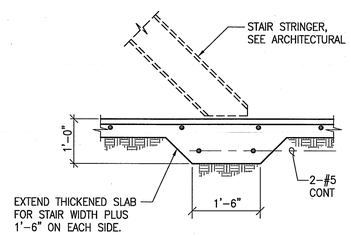

CS1-09

STEEL STAIR STRINGER TO SLAB ON GRADE (13)

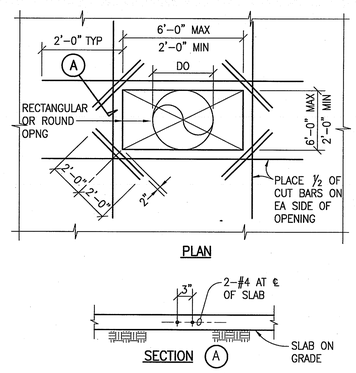

CG2-01

OPENING IN SLAB ON GRADE (12)

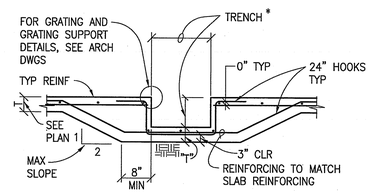

* FOR TRENCH LOCATIONS AND SIZE SEE PLANS AND/OR APPLICABLE ARCH, MECH AND ELEC DWGS.

CG2-03

TYPICAL TRENCH AT SLAB ON GRADE (11)

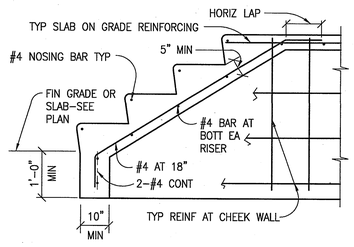

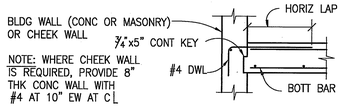

NOTE: WHERE CHEEK WALL IS REQUIRED, PROVIDE 8" THK CONC WALL WITH #4 AT 10" EW AT CL

CG1-09

CONCRETE STAIR ON GRADE (16)

County of Orange
OC PUBLIC WORKS
Architecture & Engineering

Revisions

Sym.	Descrip.	Date	By

Consultants
JOHN A. MARTIN & ASSOCIATES
Structural Engineers
950 S. Grand Avenue
Los Angeles, Calif. 90015
Phone (213) 483-3084
Fax (213) 483-3084
12180
Drawn EG Chkd. DD Date 11.6.09

A-E Seal
REGISTERED PROFESSIONAL ENGINEER
CLAUDIUS VINES
No. 4412
Exp. 12-31-10
STRUCTURAL
STATE OF CALIFORNIA

A-E ALEXANDER + HIBBS, AIA, INC.
ALEXANDER + HIBBS, AIA, INC.
Architecture and Planning
1000 Quail Street, Suite 100
Newport Beach, California 92660
(949) 476-2000

Design	DF	Chkd.	AH
PROJ. NO.	100-042-P210-4200	Date	NOV 26, 2009

Sht Title TYPICAL FOUNDATION DETAILS
Project COUNTY OF ORANGE HEALTH CARE AGENCY
401 SOUTH TUSTIN STREET
401 SOUTH TUSTIN STREET
ORANGE, CA 92866

Plan No.
52333-03608

Sheet
S-1.3