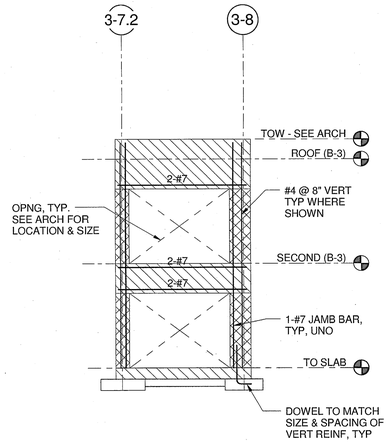

D CMU WALL ELEVATION - LINE 3-D
1/8" = 1'-0"

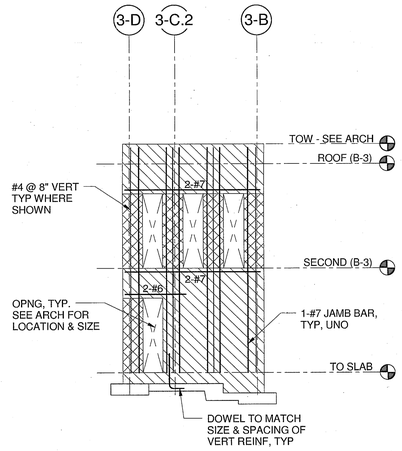

C CMU WALL ELEVATION - LINE 3-8
1/8" = 1'-0"

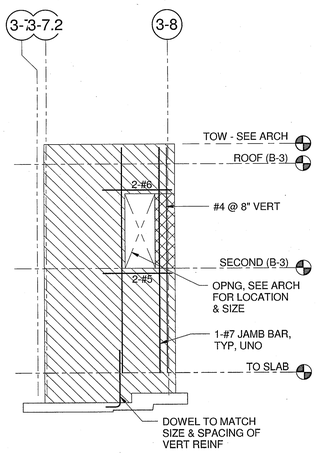

B CMU WALL ELEVATION - LINE 3-B
1/8" = 1'-0"

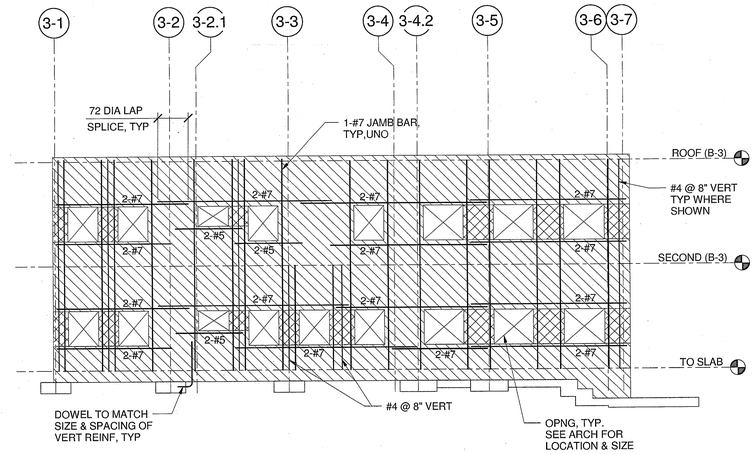

A CMU WALL ELEVATION - LINE 3-A
1/8" = 1'-0"

ALL WALLS SHALL BE 8" CMU W/#4 @16" HORIZ & VERT REINF, UNO ON ELEVATION

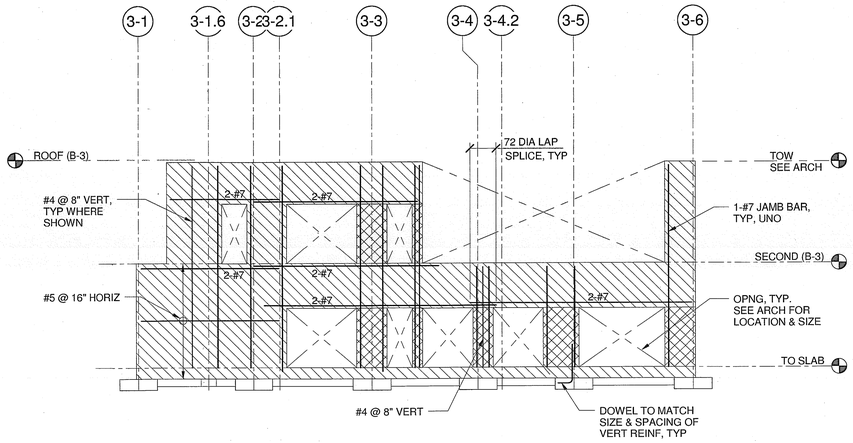

G CMU WALL ELEVATION - LINE 3-H
1/8" = 1'-0"

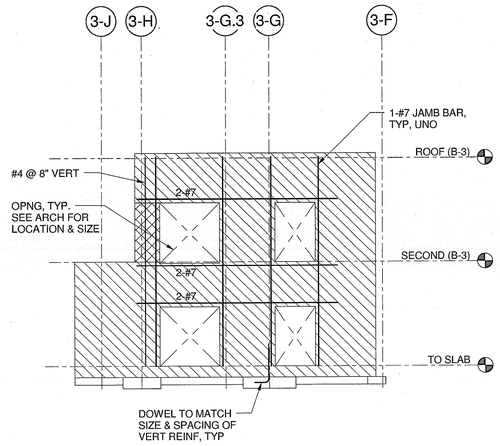

F CMU WALL ELEVATION - LINE 3-6
1/8" = 1'-0"

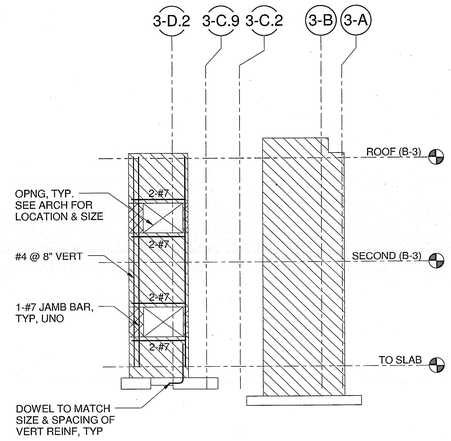

E CMU WALL ELEVATION - LINE 3-7
1/8" = 1'-0"

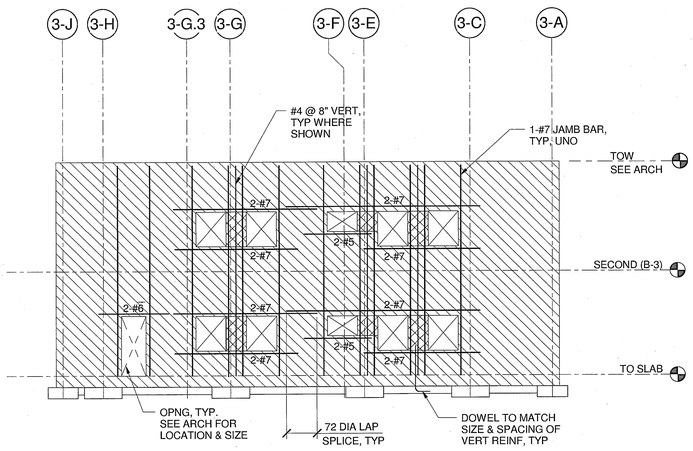

J CMU WALL ELEVATION - LINE 3-1
1/8" = 1'-0"

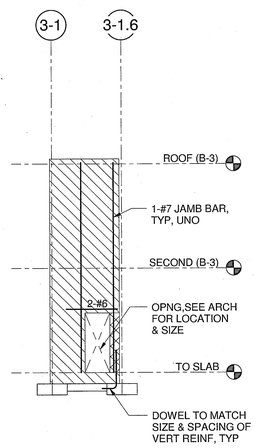

H CMU WALL ELEVATION - LINE 3-J
1/8" = 1'-0"

SHEAR WALL ELEVATION NOTES:

1. INDICATES EXTENT OF SPECIAL HORIZONTAL PIER REINFORCEMENT, SEE 1/S-1.4
2. FOR HORIZ BAR EXTENSION AT OPENINGS, SEE 7/S-1.4 ON ELEVATIONS
3. FOR TOP OF FOOTING SEE FOUNDATION PLAN AND DETAILS ON SHEET S-1.4
4. FOR ROOF ELEVATIONS, SEE FRAMING PLANS
5. PERPENDICULAR CMU WALLS NOT SHOWN FOR CLARITY
6. LOCATE VERTICAL FOOTING DOWELS TO CLEAR COLUMN BASE PLATES

County of Orange
OC PUBLIC WORKS
Architecture & Engineering

Revisions

Sym.	Descrip.	Date	By

Consultants
MARTIN & associates
JOHN A. MARTIN & ASSOCIATES
Structural Engineers
860 S. Grand Avenue
Los Angeles, CA 90015
Phone (213) 483-8490
Fax (213) 483-2084
Job No. 93106

Drawn	Chkd.	Date 11-06-09

A-E Seal
REGISTERED PROFESSIONAL ENGINEER
JAQUARE VINALES
No. 17
Exp. 12-31-10
STRUCTURAL
STATE OF CALIFORNIA

A-E
ALEXANDER + HIBBS, AIA, INC.
ALEXANDER + HIBBS, AIA, INC.
Architecture and Planning
1000 Quail Street, Suite 100
Newport Beach, California 92660
(949) 476-0200

Design	Chkd.	Date NOV. 26, 2009

Sht Title BUILDING 3 - SHEAR WALL ELEVATIONS
Project COUNTY OF ORANGE HEALTH CARE AGENCY
401 SOUTH TUSTIN STREET
401 SOUTH TUSTIN STREET
ORANGE, CA 92866
PROJ. NO. 100-042-P210-4200

Plan No.
52333-03606

Sheet
S-3.3